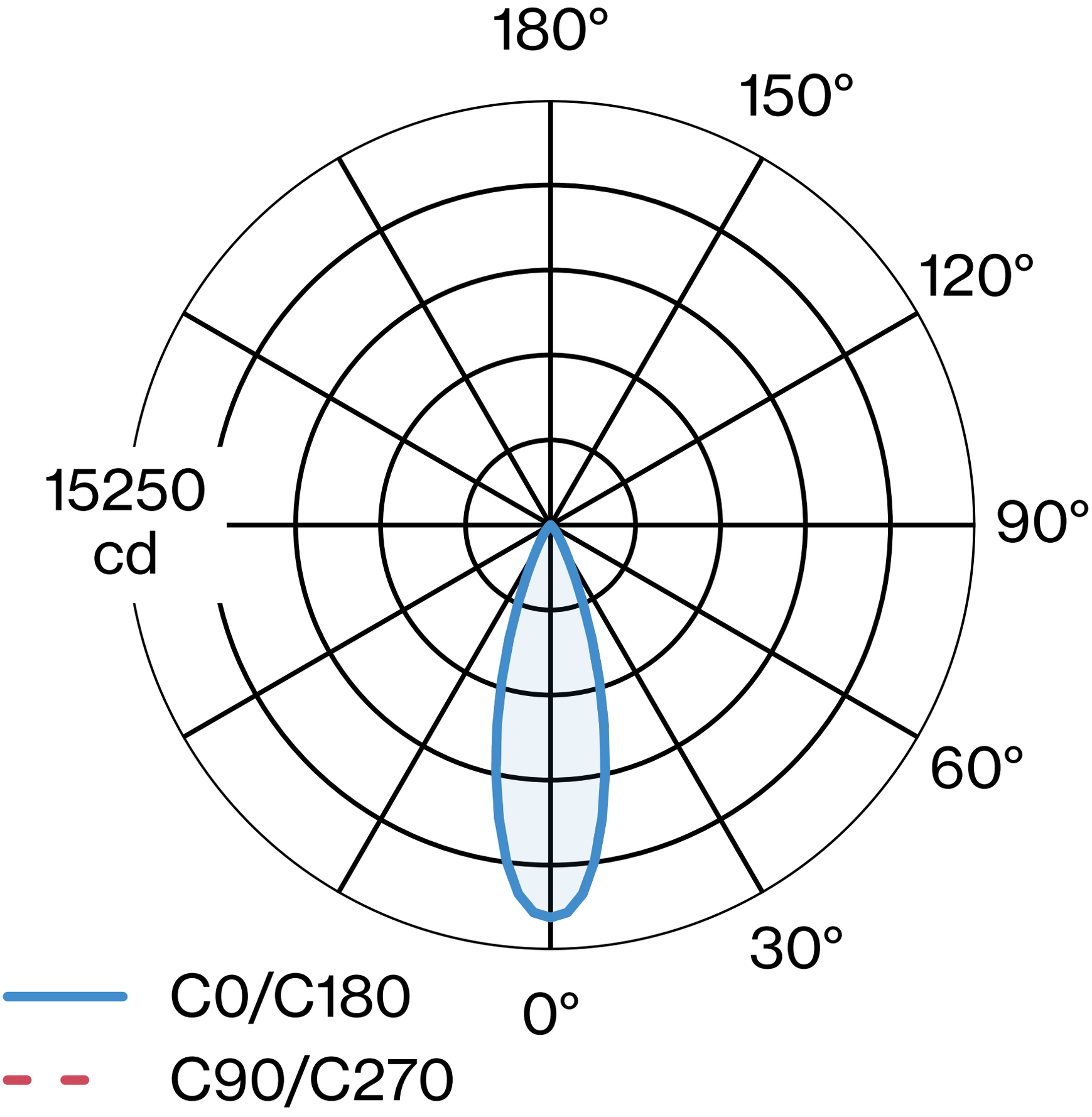
180°
150°
120°
90°
60°
30°
0°
15250
cd
C0/C180
C90/C270