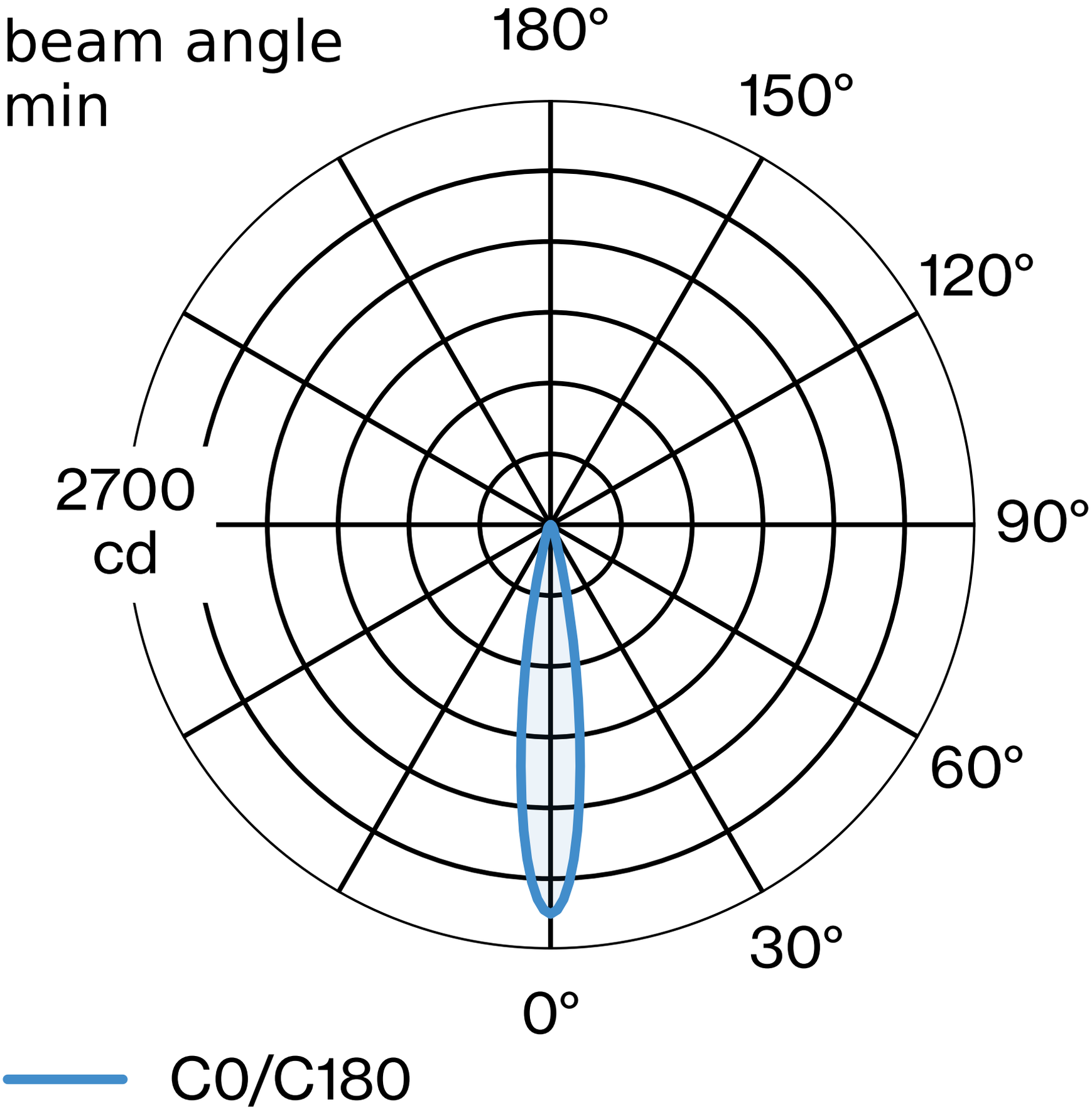
beam angle min
180°
150°
120°
90°
60°
30°
0°
2700 cd
C0/C180