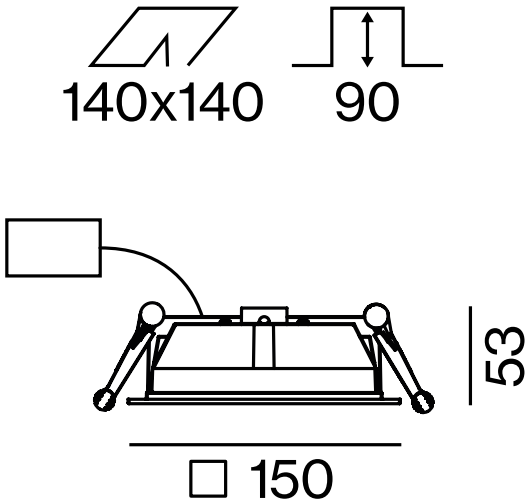
140x140
90
53
□ 150